Junction photodetectors

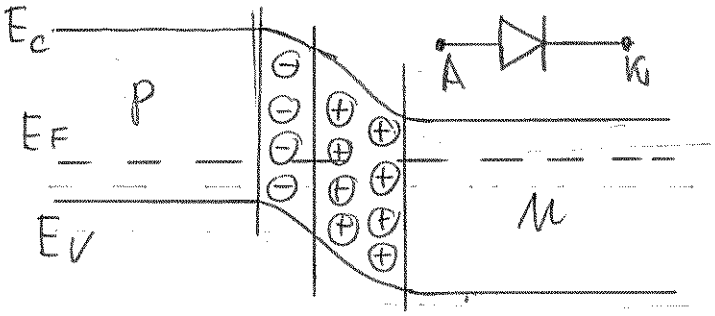

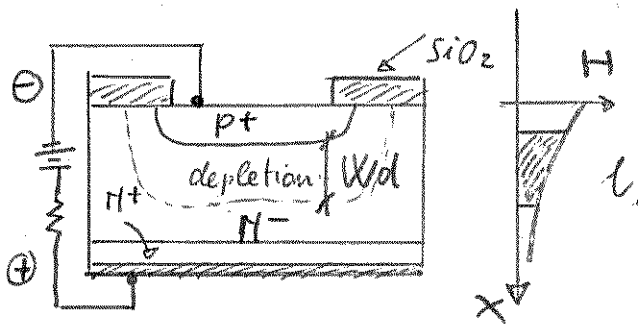

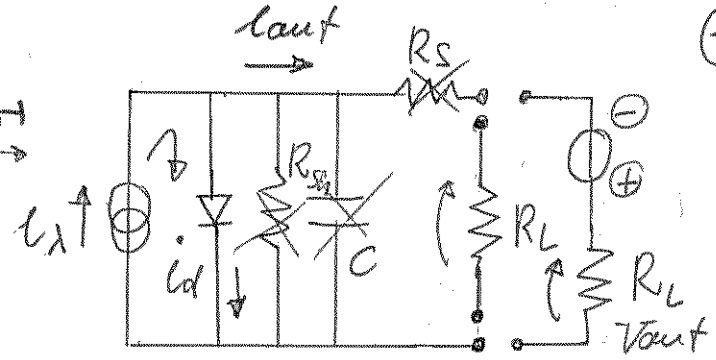

$i_\lambda = \frac{A E_0 \eta e \lambda}{hc} \rightarrow R_\lambda \simeq 0{,}8 \cdot 10^{+6} \eta \lambda = 0{,}3 \div 1 \ A/W$

$\hookrightarrow i_d = i_0 \left[\exp\left(\frac{eV}{KT}\right) - 1 \right]$

If $W_p \ll \alpha \Rightarrow \eta = (1-R)\left[1 - \exp(\alpha W_d)\right]$

Photovoltaic mode $[R_L \to \infty]$

$i_d = i_\lambda \quad i_d = i_0 \left[\exp\left(\frac{eV_d}{KT}\right) \cancel{-1} \right] \quad \{ \text{if } eV_d \gg KT = 0{,}025 \ eV \}$

$\frac{A E_0 \eta e \lambda}{hc} = i_0 \exp\left(\frac{eV_d}{KT}\right) \rightarrow V_{out} = V_d = \frac{KT}{e} \log\left(\frac{A E_0 \eta e \lambda}{i_0 hc}\right) \qquad \alpha = \frac{\eta e}{hc i_0}$

$V_{out} = \frac{KT}{e} \log(\alpha A E_0 \lambda) \Rightarrow V_{out} \rightarrow \log(P_{in} \lambda)$

Photoconductive mode [Reverse bias, $R_L = 50\,\Omega$]

$V_{out} = i_{out} R_L = (i_\lambda - i_d) R_L = (i_\lambda + i_0) R_L \quad V_{out} \simeq \frac{A E_0 \eta e \lambda}{hc} \cdot R_L \quad V_{out} \simeq P_{in}$

Photoconductive mode $[V_B = 0 \quad R_L \gg 50\,\Omega]$

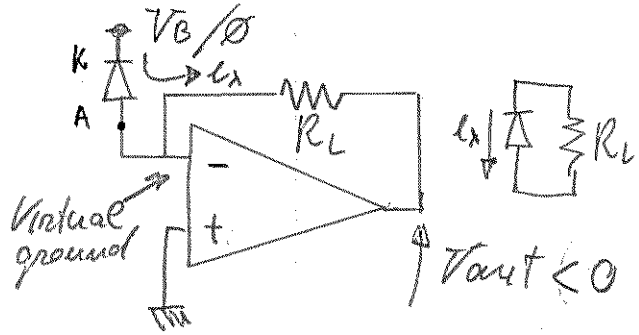

$V_B = 0 \rightarrow i_d = 0 \quad V_{out} = i_\lambda R_L \qquad \underline{V_{out} \propto P_{in}}$

Better linearity, better sensitivity,
Worse frequency response, high dynamic range
Used in radiometric ($\simeq$ CW) measurements

Calculus of the Width of the depletion layer

Depletion approximation:

charge density = step function $[\rho_p = N_a \quad \rho_n = N_d]$

$$\operatorname{div} \vec{E} = \rho/\varepsilon_0\varepsilon_r \rightarrow \frac{dE_x}{dx} = \rho/\varepsilon_0\varepsilon_r$$

$$E_x(x) = \rho/\varepsilon_0\varepsilon_r \, x \qquad V(x) = \rho/\varepsilon_0\varepsilon_r \frac{x^2}{2} \qquad V_{bulk} = 0$$

$$\begin{cases} \Delta V_n = \dfrac{e N_d}{\varepsilon_0\varepsilon_r} \dfrac{\Delta x_n^2}{2} \\ \Delta V_p = \dfrac{e N_a}{\varepsilon_0\varepsilon_r} \dfrac{\Delta x_p^2}{2} \\ N_d \Delta x_n = N_a \Delta x_p \\ \Delta V_n + \Delta V_p = V_B \end{cases}$$

$$x_n = \sqrt{\frac{N_a}{N_a+\cancel{N_d}} \frac{2\varepsilon_0\varepsilon_r V_B}{e N_d}} \qquad x_p = \sqrt{\frac{N_d}{N_a+\cancel{N_d}} \frac{2\varepsilon_0\varepsilon_r V_B}{e N_a}}$$

$$x = \sqrt{\frac{2V_B\varepsilon_0\varepsilon_r(N_a+N_d)}{e N_a N_d}}$$

$N_a \gg N_d$

$$x_n = \sqrt{\frac{2\varepsilon_0\varepsilon_r V_B}{e N_d}} \qquad x_p = \sqrt{\frac{2\varepsilon_0\varepsilon_r N_d V_B}{e N_a^2}}$$

PIN Photodiodes

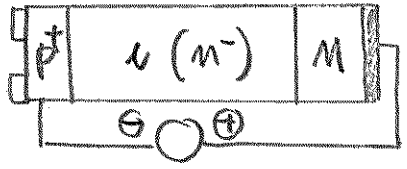

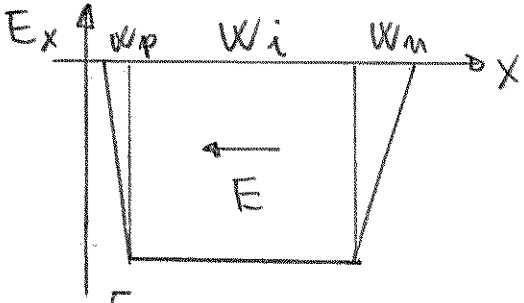

$[In_{0,53}Ga_{0,47}As]$

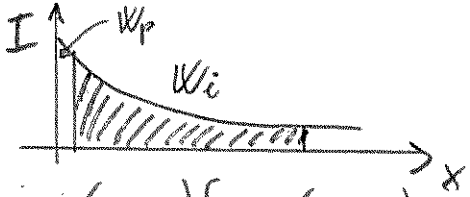

$W_p \ll W_i$

$$\eta = (1-r)\left[\exp(-\alpha W_p) - \exp[-\alpha(W_i+W_p)]\right]$$

$$\eta \simeq (1-r)\exp(-\alpha W_i) \quad \text{if } W_p \simeq 0$$

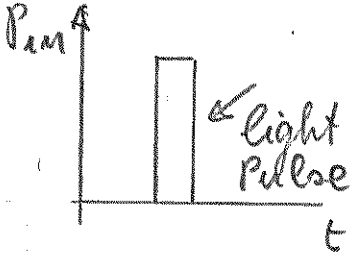

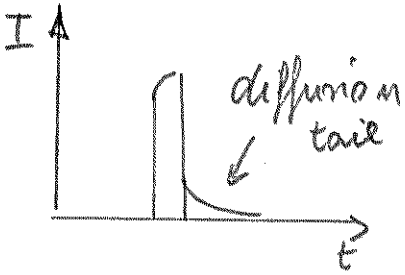

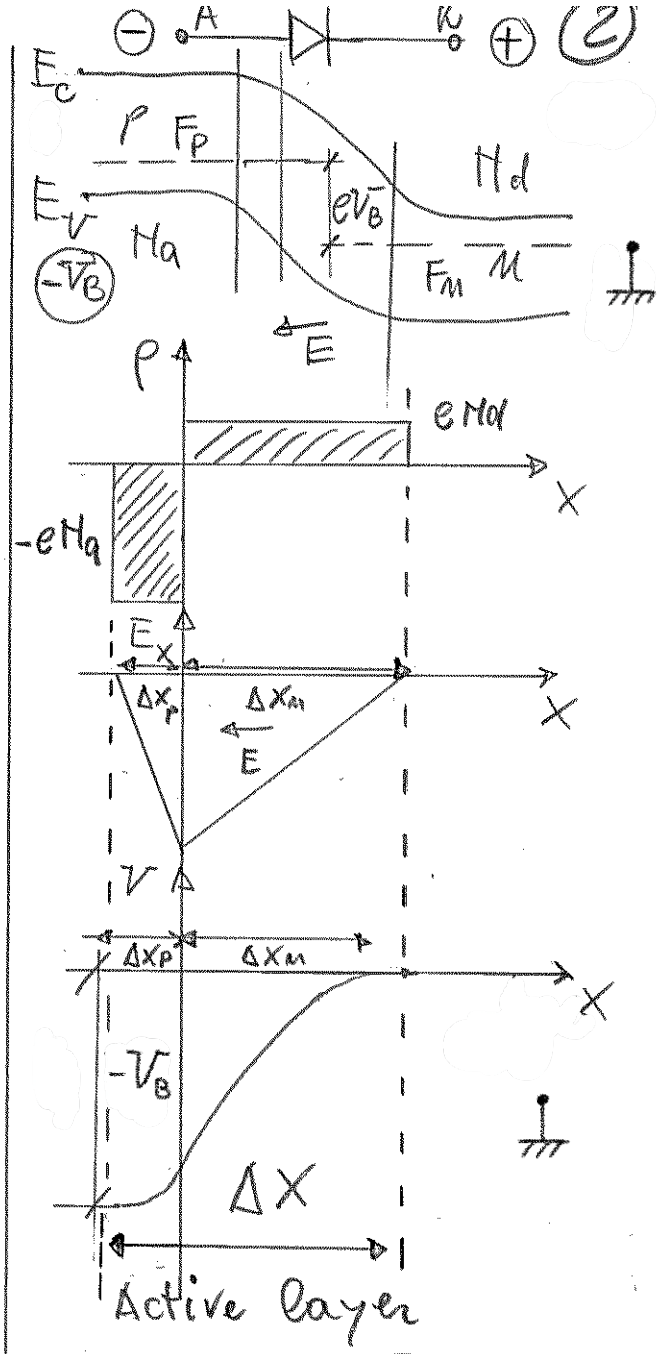

$$\Delta X \propto \sqrt{V_B}$$

$$V(x) = V_{ref} - \int_{ref}^{x} \vec{E} \cdot d\vec{z}$$

Frequency Response

- $\tau_{drift} = \frac{W_i}{V_{sat}}$ $\quad V_{sat} \simeq 10^5\ m/s$ $\quad [|\vec{E}| = 20\ KV/m]$ $\quad |\vec{E}|$ could be higher

Depends on the thickness of the intrinsic layer
→ see example below !

Junction capacitance

$$C_J = \frac{A \varepsilon_0 \varepsilon_r}{W_i} \qquad C_J \propto (V_B)^{-1/3}$$

- $\tau_{RC} = R_L C_J \qquad \tau_{RC} = \frac{R_L A \varepsilon_0 \varepsilon_r}{W_i}$

$$\tau = \sqrt{\tau_{drift}^2 + \tau_{RC}^2} \qquad \tau_{min} \Leftrightarrow \tau_{drift} = \tau_{RC}$$

InGaAs photodiode

$\alpha = 10^6\ m^{-1} \qquad W_i = 2\ \mu m$

$\tau_{drift} \simeq 20\ ps$

$A = 100 \times 100\ \mu m^2 \qquad \varepsilon_r = 12 \qquad R_L = 50\ \Omega$

$\tau_{RC} \simeq 26\ ps$

$\tau \simeq 32\ ps \qquad f_c = 4.8\ GHz$

$$V_{out} = \frac{i_\lambda R_L}{\sqrt{1 + 4\pi^2 f^2 \tau^2}}$$

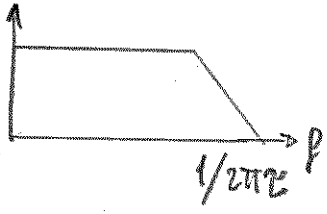

$In_{0.53}Ga_{0.47}As$
$E_g = 0{,}74\ eV$
$\lambda_{th} = 1.68\ \mu m$

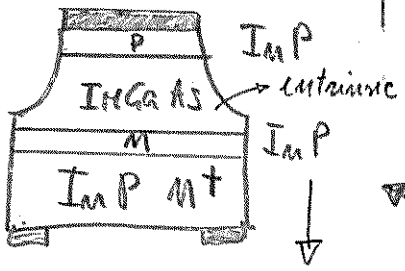

InP $\quad E_g = 1.34\ eV$
$\lambda_{th} = 0{,}92\ \mu m$

Diffusion tail can be reduced with heterojunction

Diffusion tail

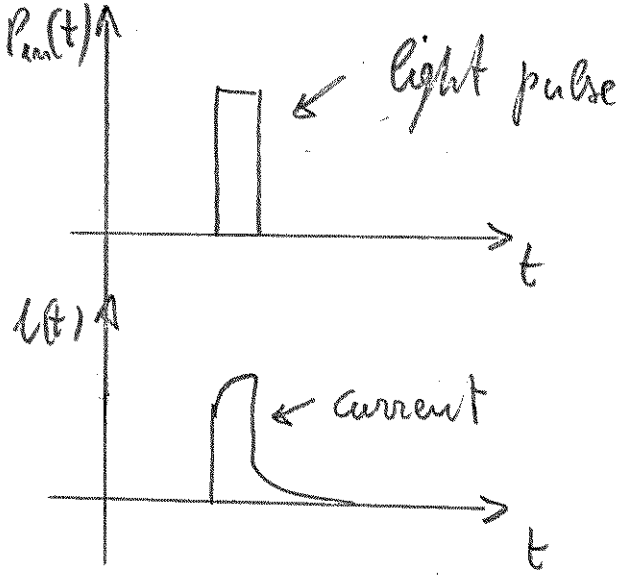

$$\tau_{diff} = \frac{d^2}{D}$$

D = diffusion coefficient
d = diffusion distance